DEGSON ELECTRONICS CO., LTD.

Product Specification

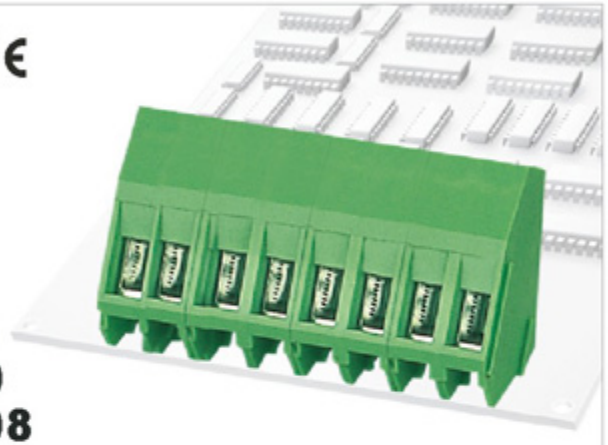

DG104-5.0
DG104-5.08

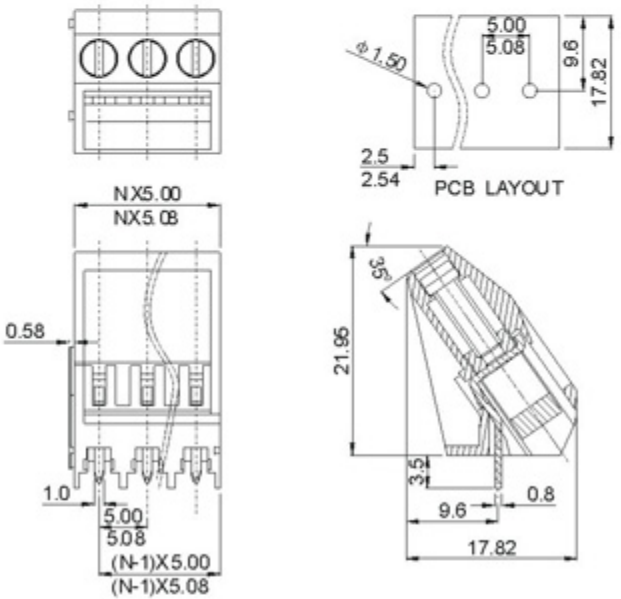

Approval		
Electrical		
Standard	UL	IEC
Rated voltage	300V	250V
Rated current	15A	24A
Wire range	24-14AWG	0.5-2.5mm²
With standing voltange	AC2000V/1Min	
Mechanical		
Torque	0.5Nm(4.4Lb-In.)	
Ambient temperature	-40°C~+105°C	
Strip length	7mm	
Dimensions		
Pitch	5.0mm(.197″)5.08mm(.200″)	
Poles	2P,3P-24P	
Material		
Housing	PA66, UL94V-0	
Screws	M3,steel,Cr³⁺Zn plated	
Pin header	Brass,Tin plated	
Cage	Brass,Ni plated	

HOW TO ORDER

[ ] – [ ][ ] P – [ ][ ] – [X][X][X]

Customer Request

Series Number

Number of Pole

1	Single pitch
2	Double pitch

Color

1	Grey	4	Green	7	Trans-parent
2	Blue	5	Orange	8	Yellow
3	Black	6	Red	9	White

MM (INCH)	DEGSON ELECTRONICS CO., LTD.
THIRD ANGLE PROJECTION	NAME DG104-5.0 DG104-5.08