DEGSON ELECTRONICS CO., LTD.

Product Specification

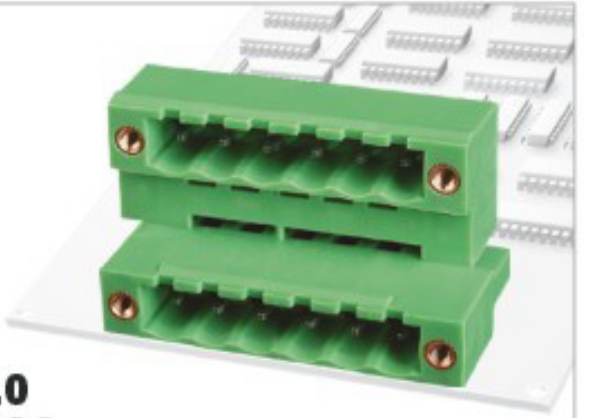

2EDGRTM-5.0
2EDGRTM-5.08

Approval		
Electrical		
Standard	UL	IEC
Rated voltage	300V	320V
Rated current	15A	10A
With standing voltage	AC2500V/1Min	
Mechanical		
Ambient temperature	-40°C~+105°C	
Dimensions		
Pitch	5.0mm(.197")5.08mm(.200")	
Poles	2*(2P-22P)	
Material		
Housing	PA66, UL94V-0	
Pin header	Brass,Tin plated	
Nut	M2.5,Brass	

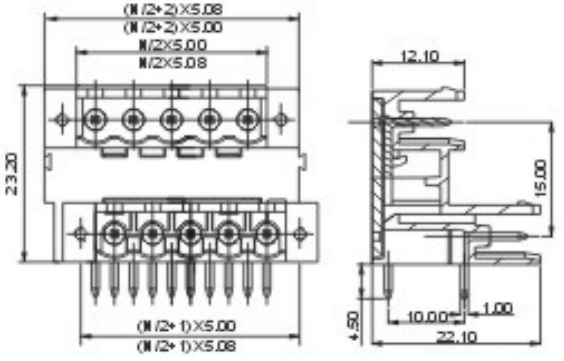

PCB LAYOUT

HOW TO ORDER

[ ] – [ ][ ] P – [ ][ ] – [X][X][X]

Customer Request

Series Number

Number of Pole

1	Single pitch
2	Double pitch

Color

1	Grey	4	Green	7	Transparent
2	Blue	5	Orange	8	Yellow
3	Black	6	Red	9	White

MM (INCH)	DEGSON ELECTRONICS CO., LTD.
THIRD ANGLE PROJECTION	NAME 2EDGRTM-5.0 2EDGRTM-5.08